creavit®
"Same sight, different vision"

Technical Details

Product Name	: Selin Suite	**Fitting Parts**	: 120mm Self Cleaning Pipe
Product Code	: SL320		
Weight	: Wall Hung Closet		
Colour	: White		
Proper Seat Cover Name	: Amasra & Polyester Sear Cover		

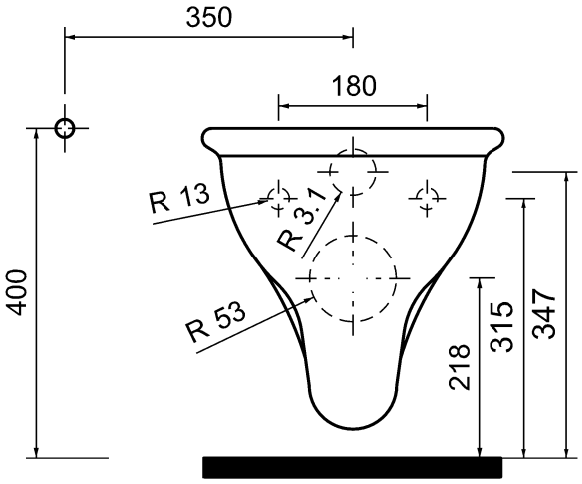

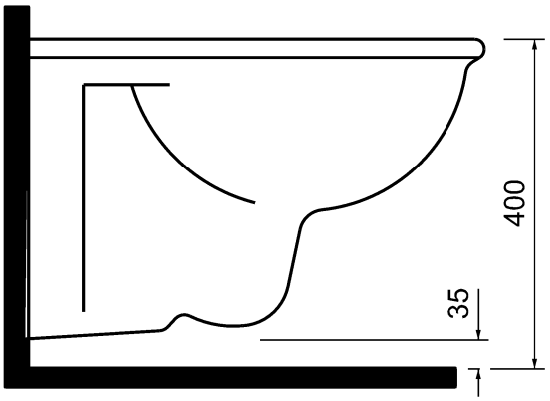

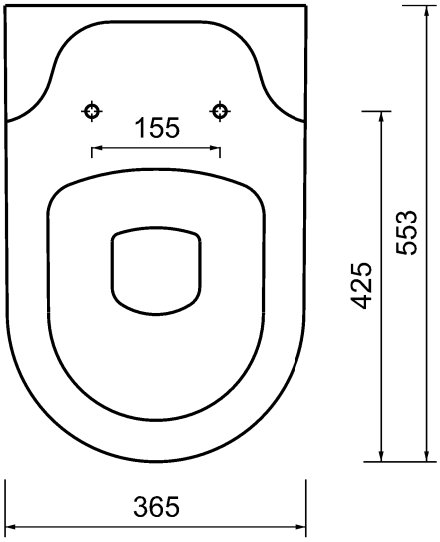

Çanakcılar
GROUP COMPANY

www.creavit.com.tr